SS-CHP7

SERVICE MANUAL

Ver. 1.2 2005.02

US Model
CanadianModel
AEP Model
UK Model
E Model
Australian Model

L-ch

- SS-CHP7 is the speaker system in CMT-HP7.

SPECIFICATIONS

Speaker system	3-way, 3-unit, bass-reflex type
Speaker units	
Woofer:	12 cm, cone type
Tweeter:	5 cm, cone type
Super Tweeter:	2 cm, dome type
Nominal impedance	6 ohms
Dimensions (w/h/d)	Approx. 167 × 280 × 230 mm
Mass	Approx. 2.6 kg net per speaker

Design and specifications are subject to change without notice.

SPEAKER SYSTEM

9-877-350-03
2005B16-1
© 2005.02

Sony Corporation
Personal Audio Company
Published by Sony Engineering Corporation

SONY®

EXPLODED VIEW AND PARTS LIST

NOTE:

- -XX, -X mean standardized parts, so they may have some differences from the original one.
- Items marked "*" are not stocked since they are seldom required for routine service. Some delay should be anticipated when ordering these items.
- The mechanical parts with no reference number in the exploded views are not supplied.

L-CH

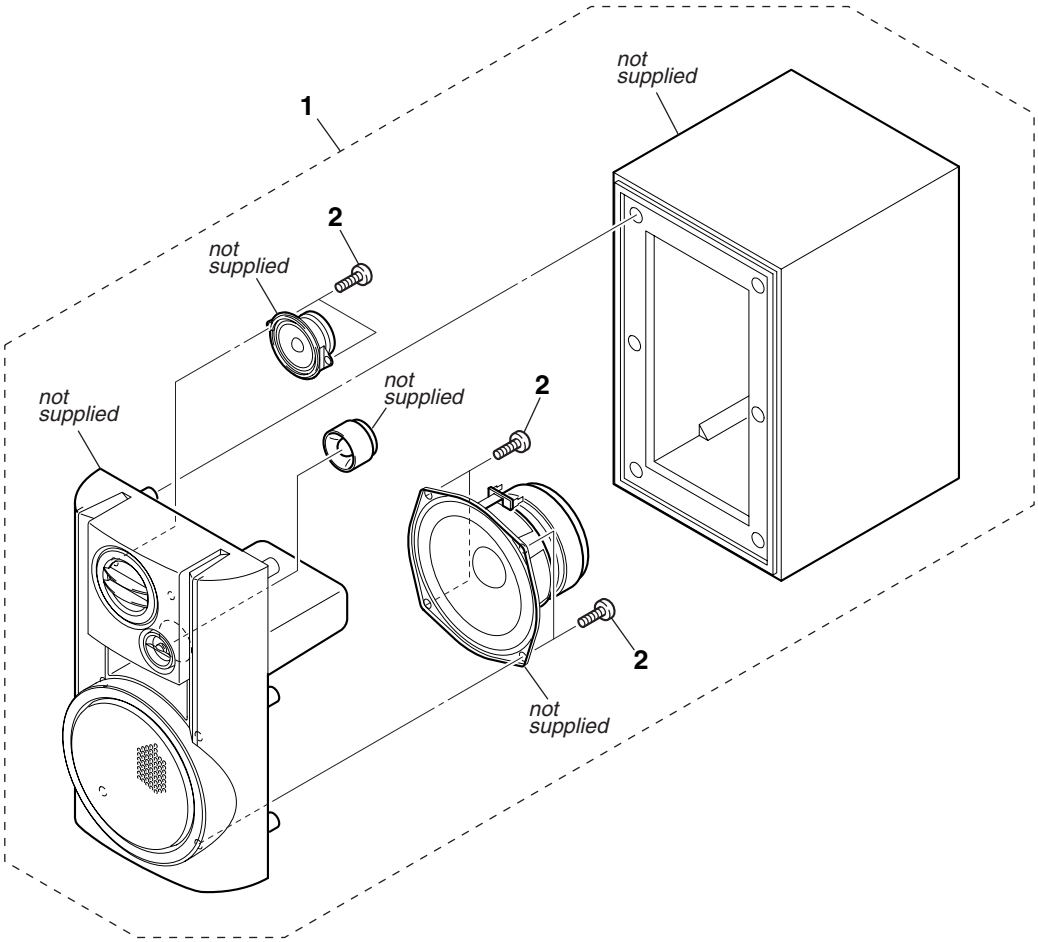

Ref. No.	Part No.	Description	Remarks
1	A-4738-525-A	SYSTEM (L) ASSY	
1	A-4738-526-A	SYSTEM (R) ASSY	
2	4-986-971-01	SCREW (3.5)	

MEMO

REVISION HISTORY

Clicking the version allows you to jump to the revised page.
Also, clicking the version at the upper right on the revised page allows you to jump to the next revised page.

Ver.	Date	Description of Revision
1.0	2003.06	New
1.1	2003.10	Addition of Part No. and Description of L-ch SPEAKER ASSY. (SPM-03099)
1.2	2005.02	Correction of the name of the cover photograph and the side of EXPLODED VIEW (SPM-05011)